BROOME

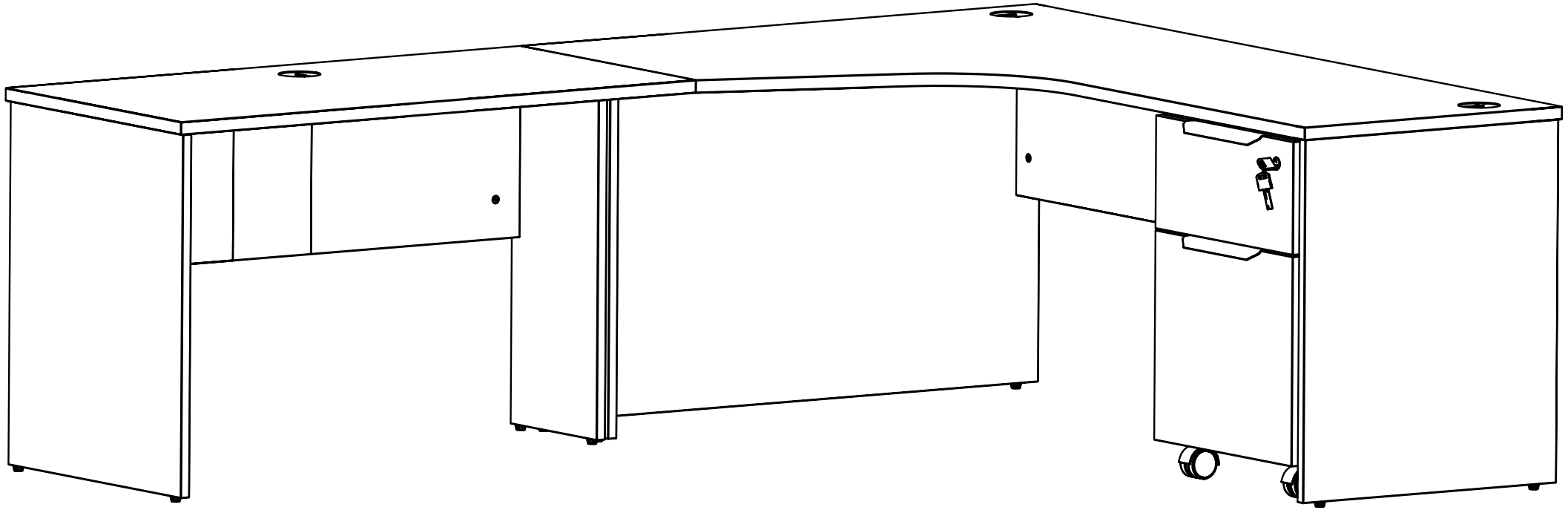

MODLOFT

ASSEMBLY INSTRUCTION
BROOME DE-WA711L-SET

PARTS

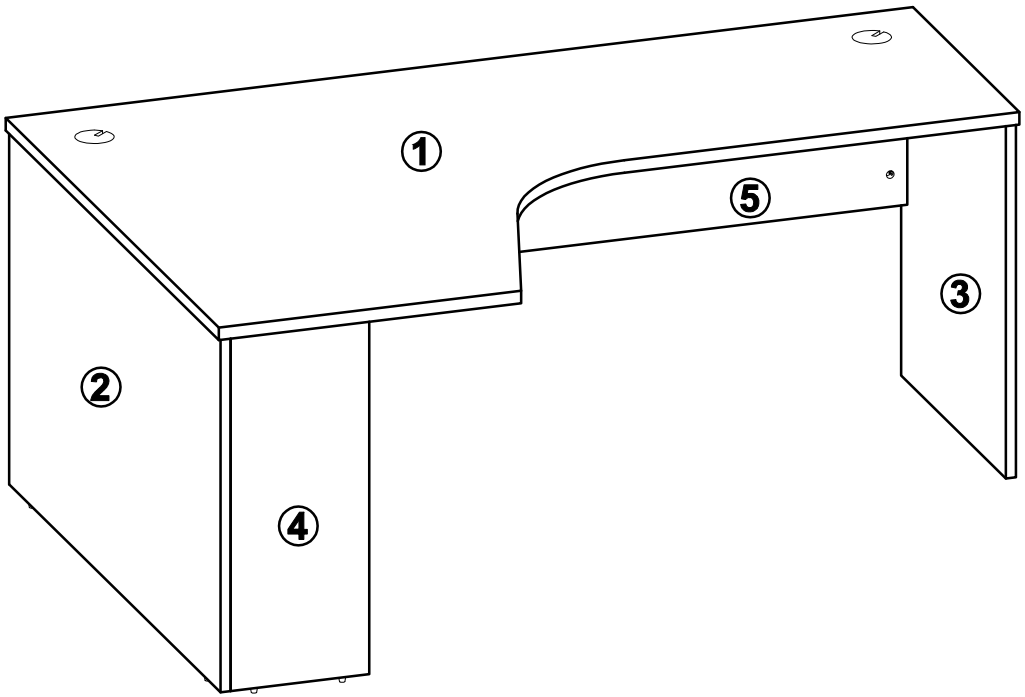

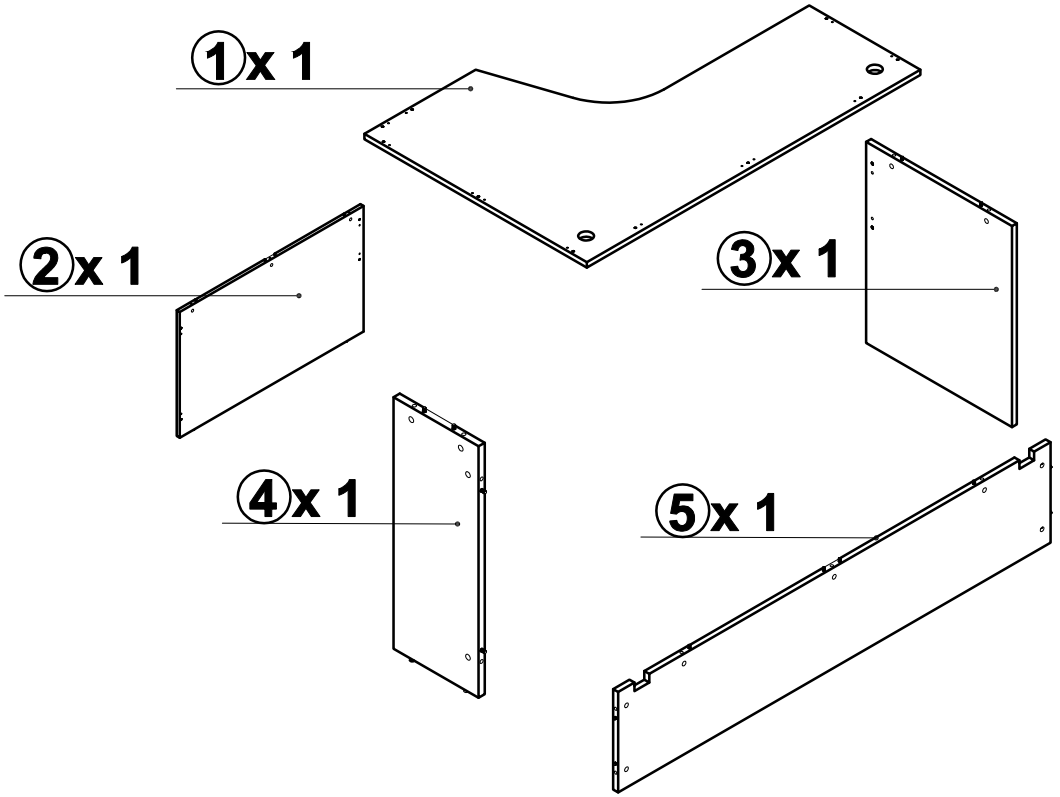

ASSEMBLY INSTRUCTION
BROOME DE-WA711L-SET

STEP 1

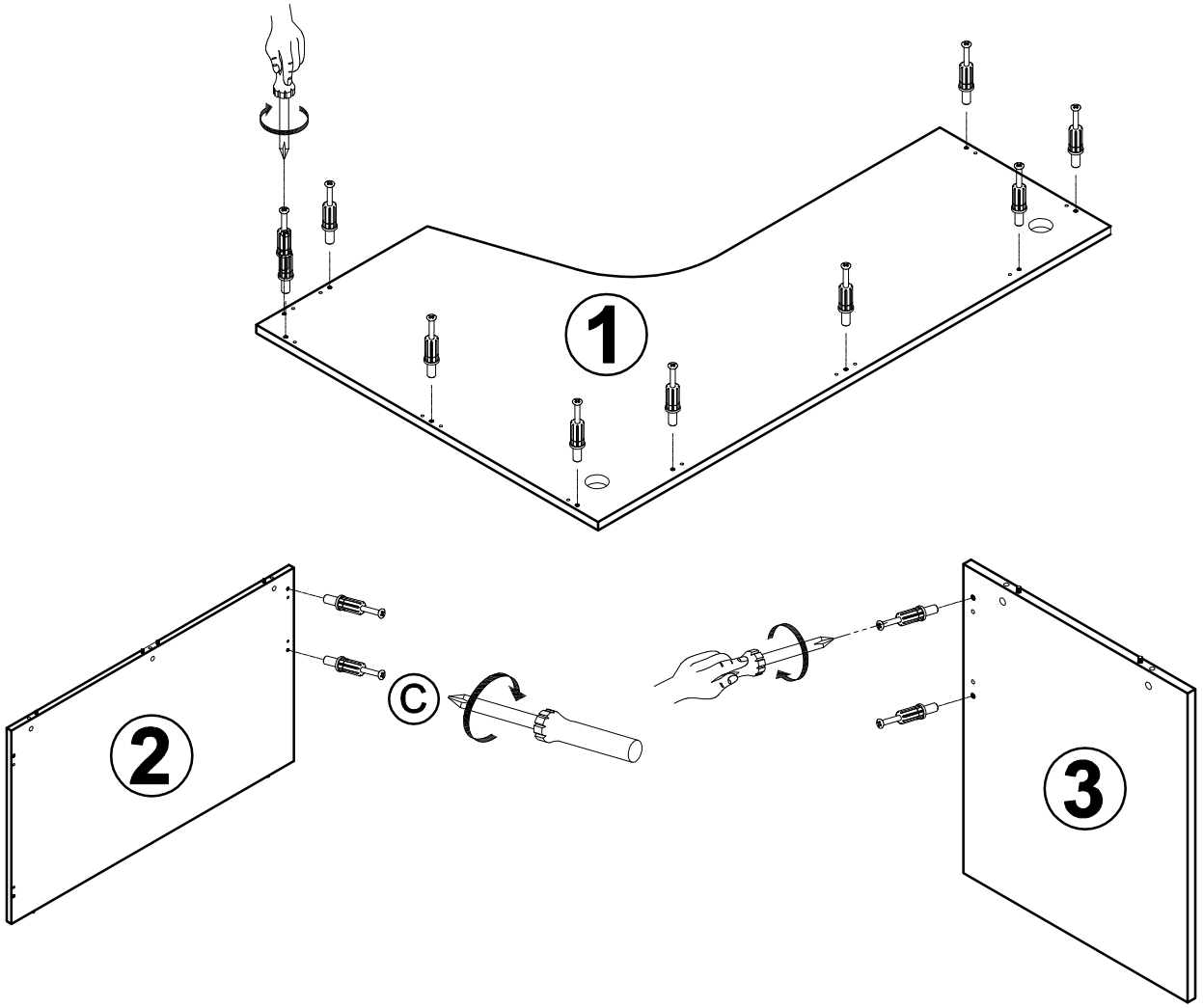

HARDWARE

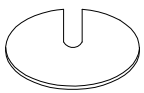

Ⓐ x 2

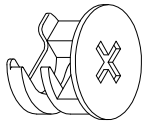

Ⓑ x 16

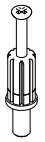

Ⓒ x 16

TOOL

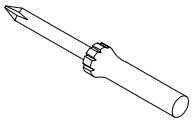

ASSEMBLY INSTRUCTION
BROOME DE-WA711L-SET

STEP 2

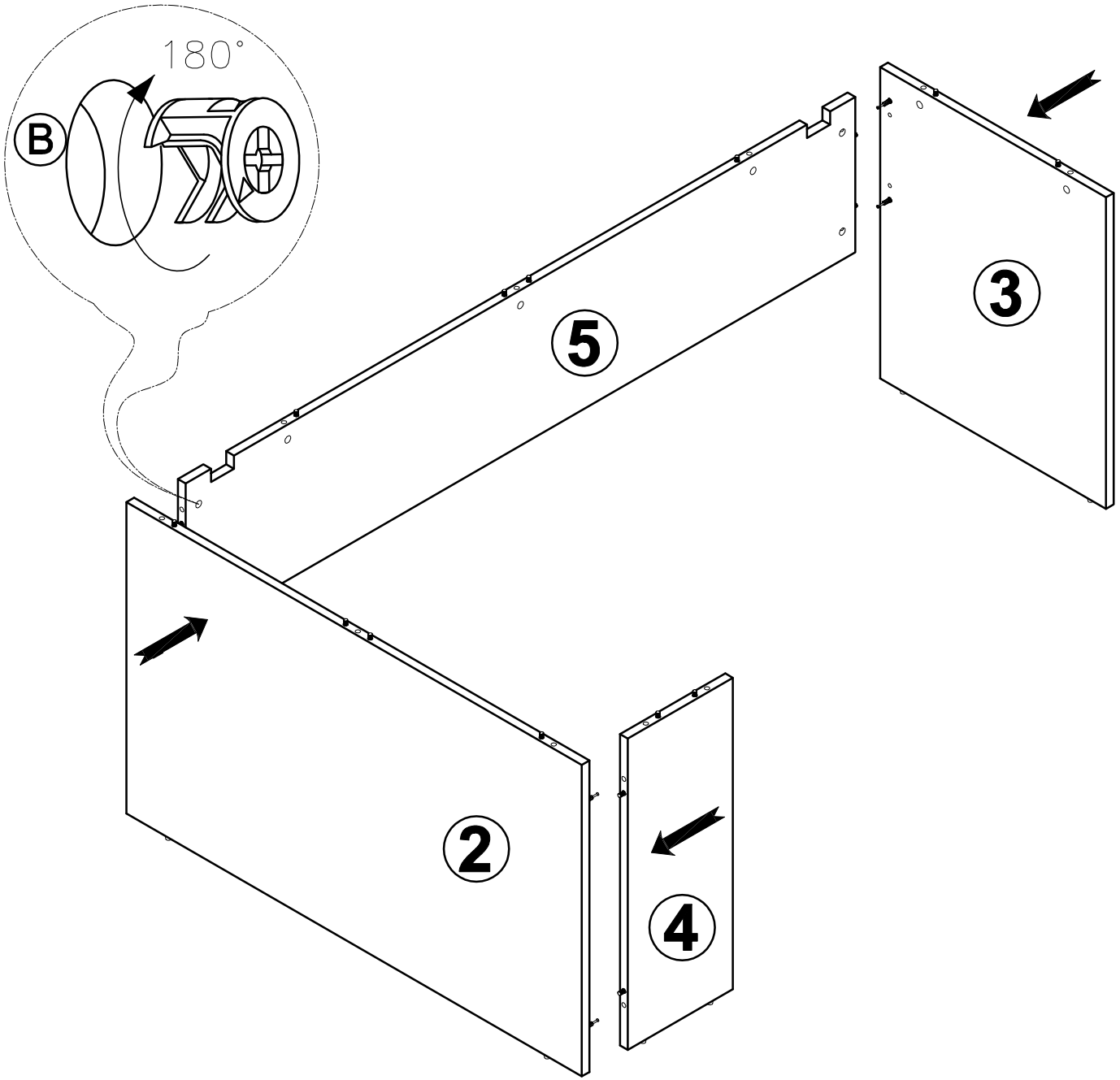

ASSEMBLY INSTRUCTION
BROOME DE-WA711L-SET

STEP 3

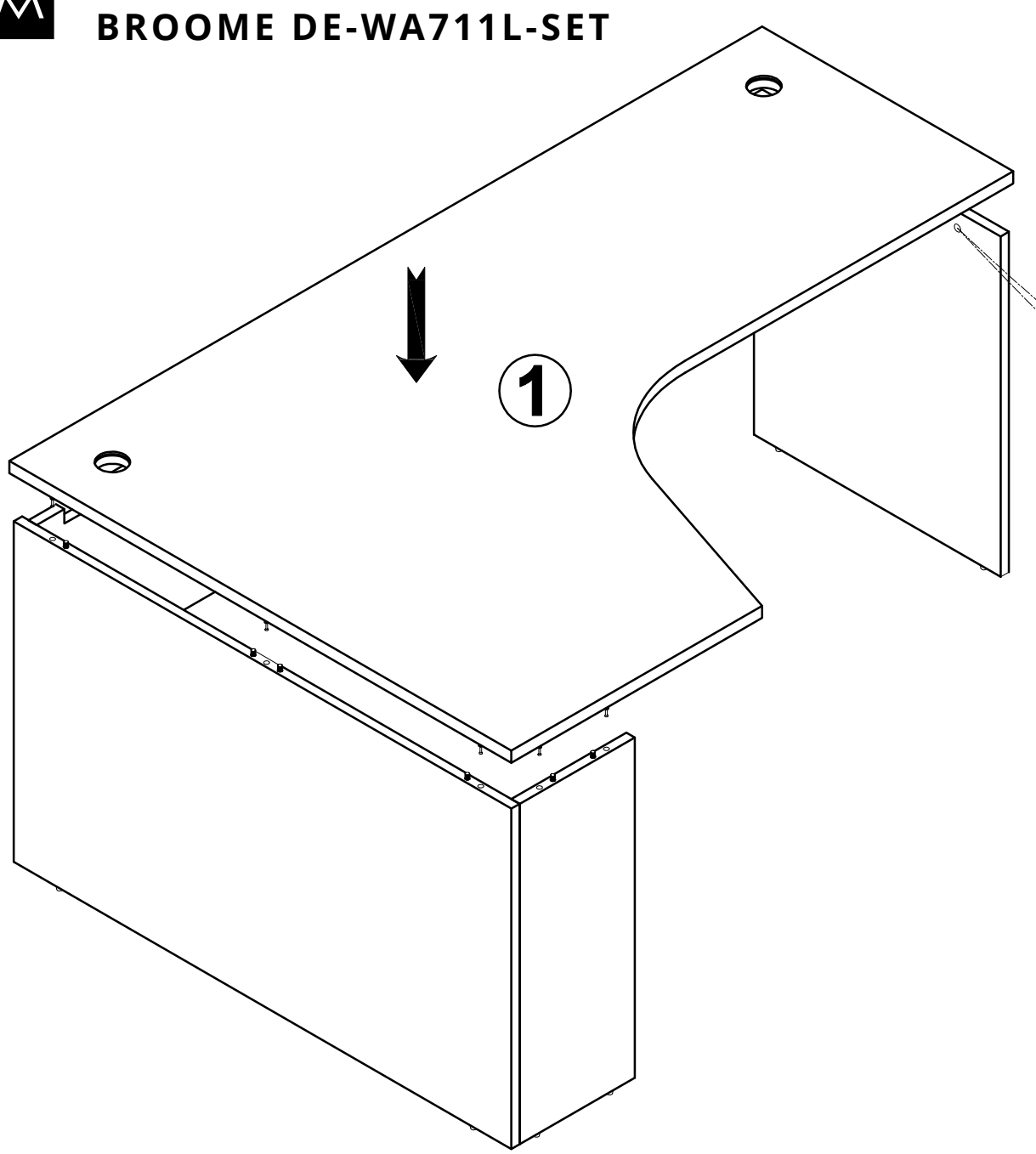

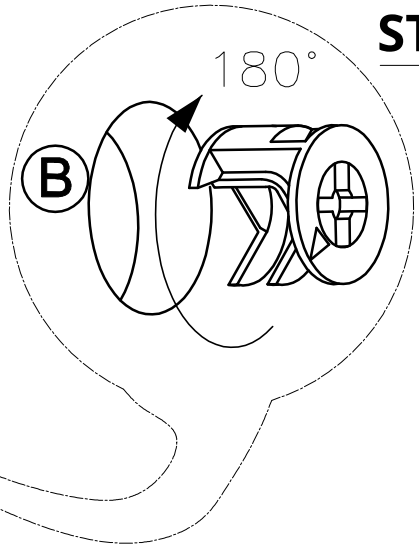

ASSEMBLY INSTRUCTION
BROOME DE-WA711L-SET

STEP 4

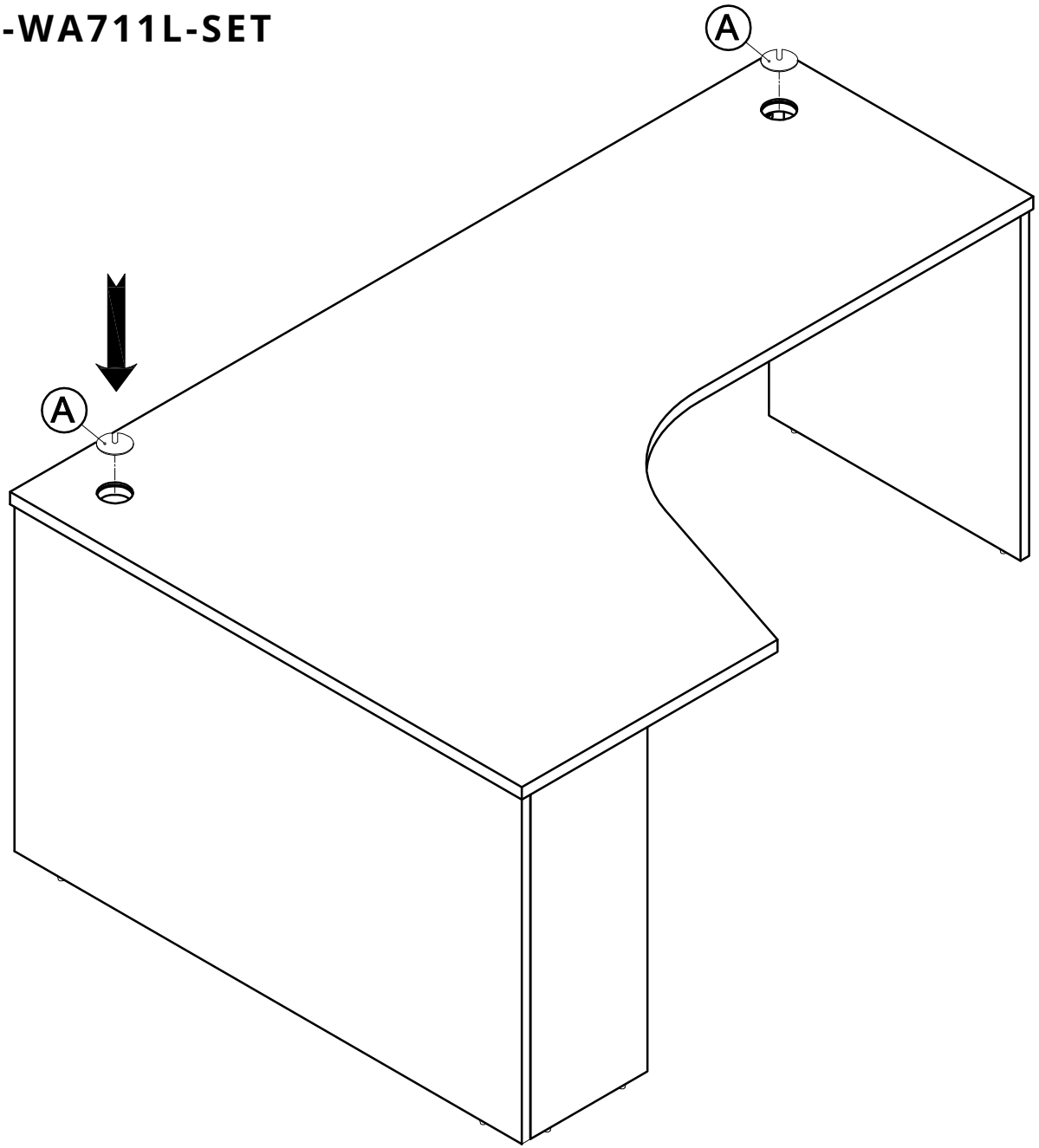

ASSEMBLY INSTRUCTION
BROOME DE-WA711L-SET

PARTS

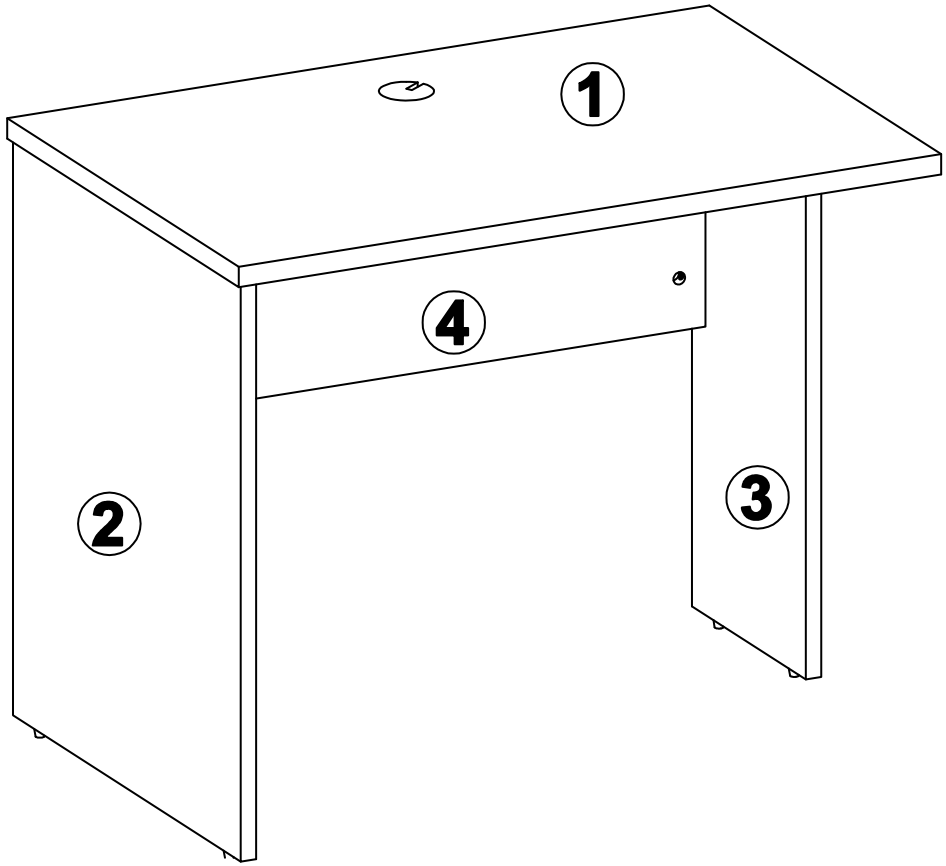

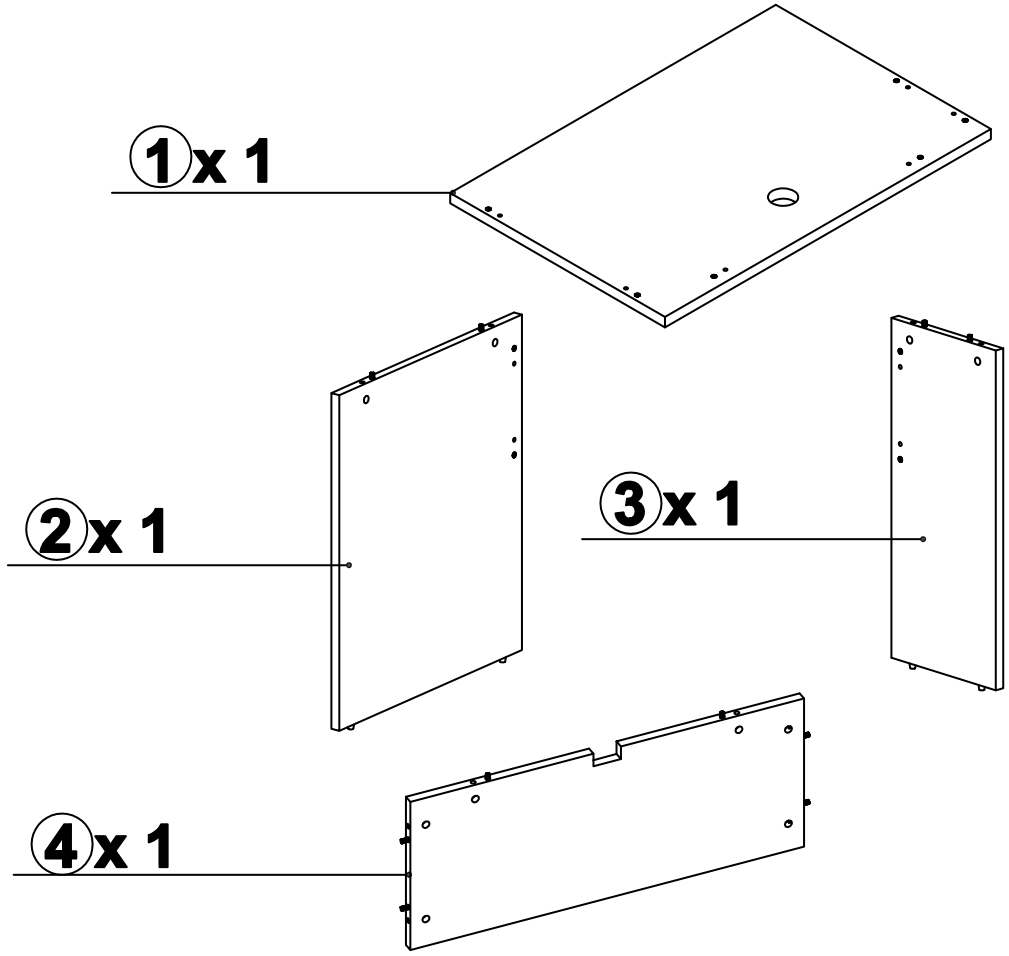

ASSEMBLY INSTRUCTION
BROOME DE-WA711L-SET

STEP 1

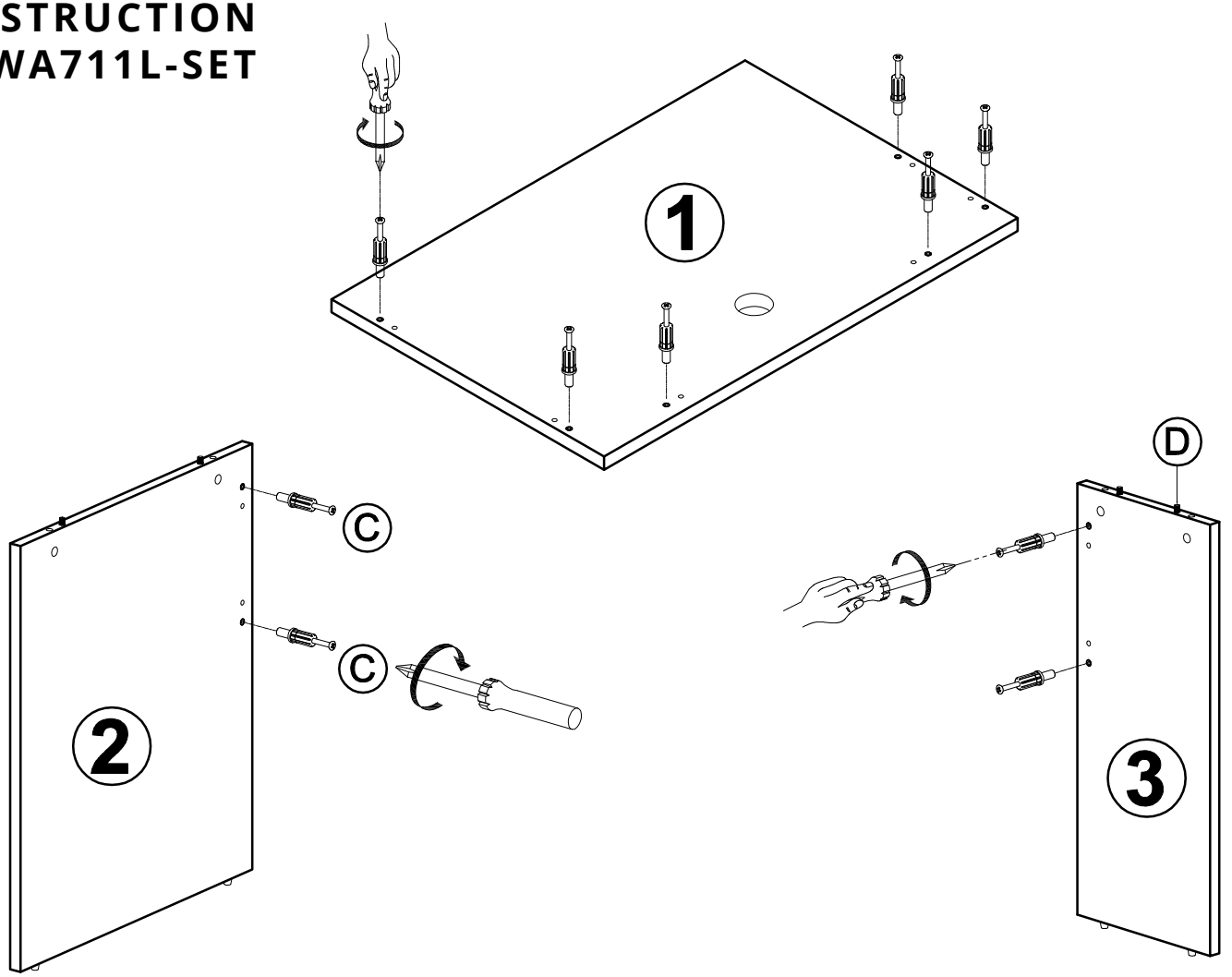

HARDWARE

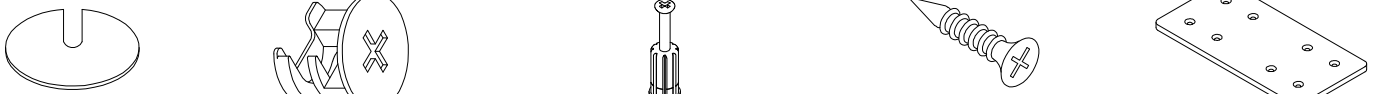

Ⓐ x 1 Ⓑ x 10 Ⓒ x 10 Ⓓ x 8 Ⓔ x 1

TOOL

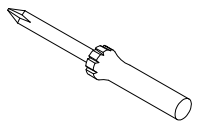

ASSEMBLY INSTRUCTION
BROOME DE-WA711L-SET

STEP 2

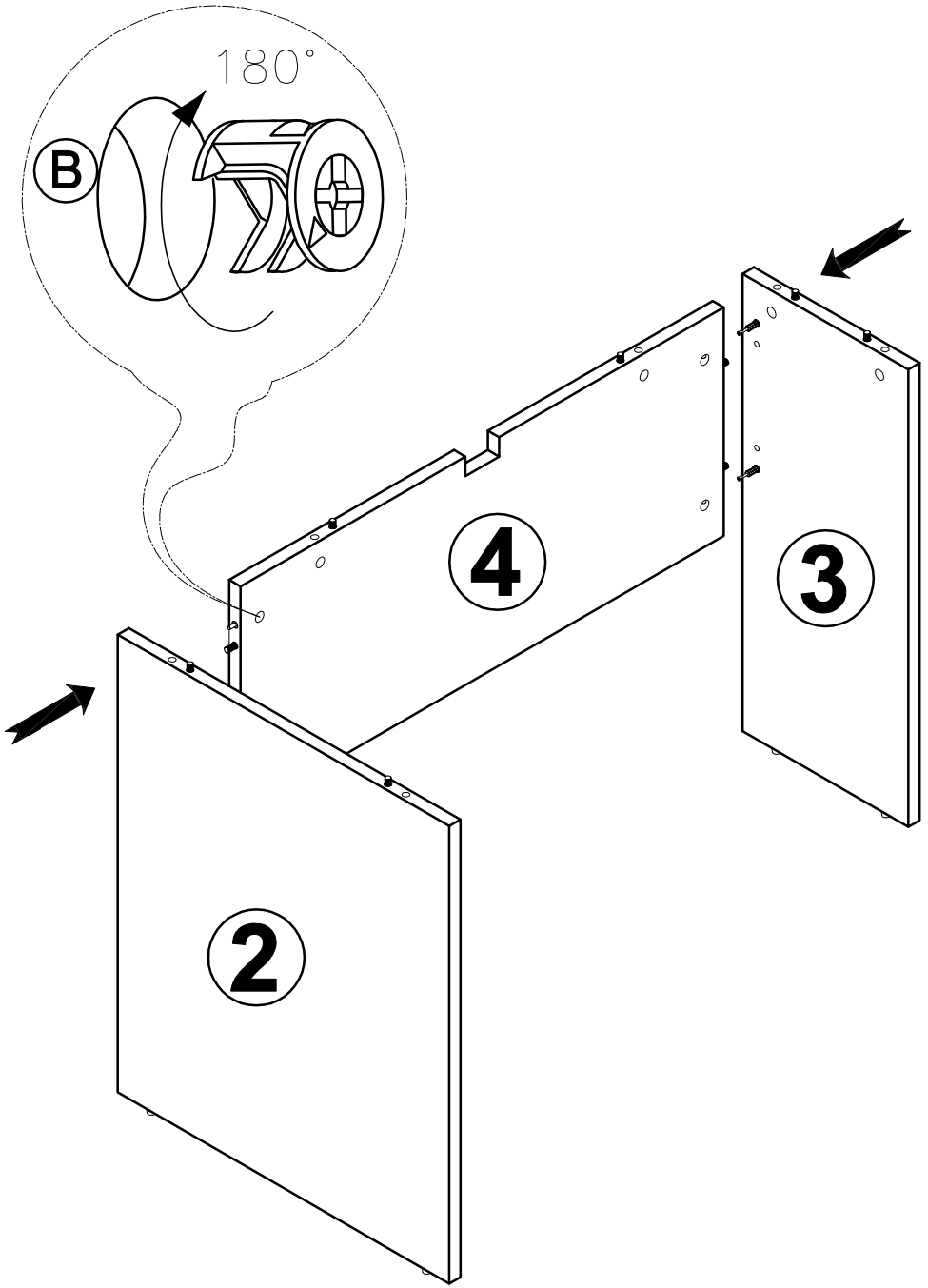

ASSEMBLY INSTRUCTION
BROOME DE-WA711L-SET

STEP 3

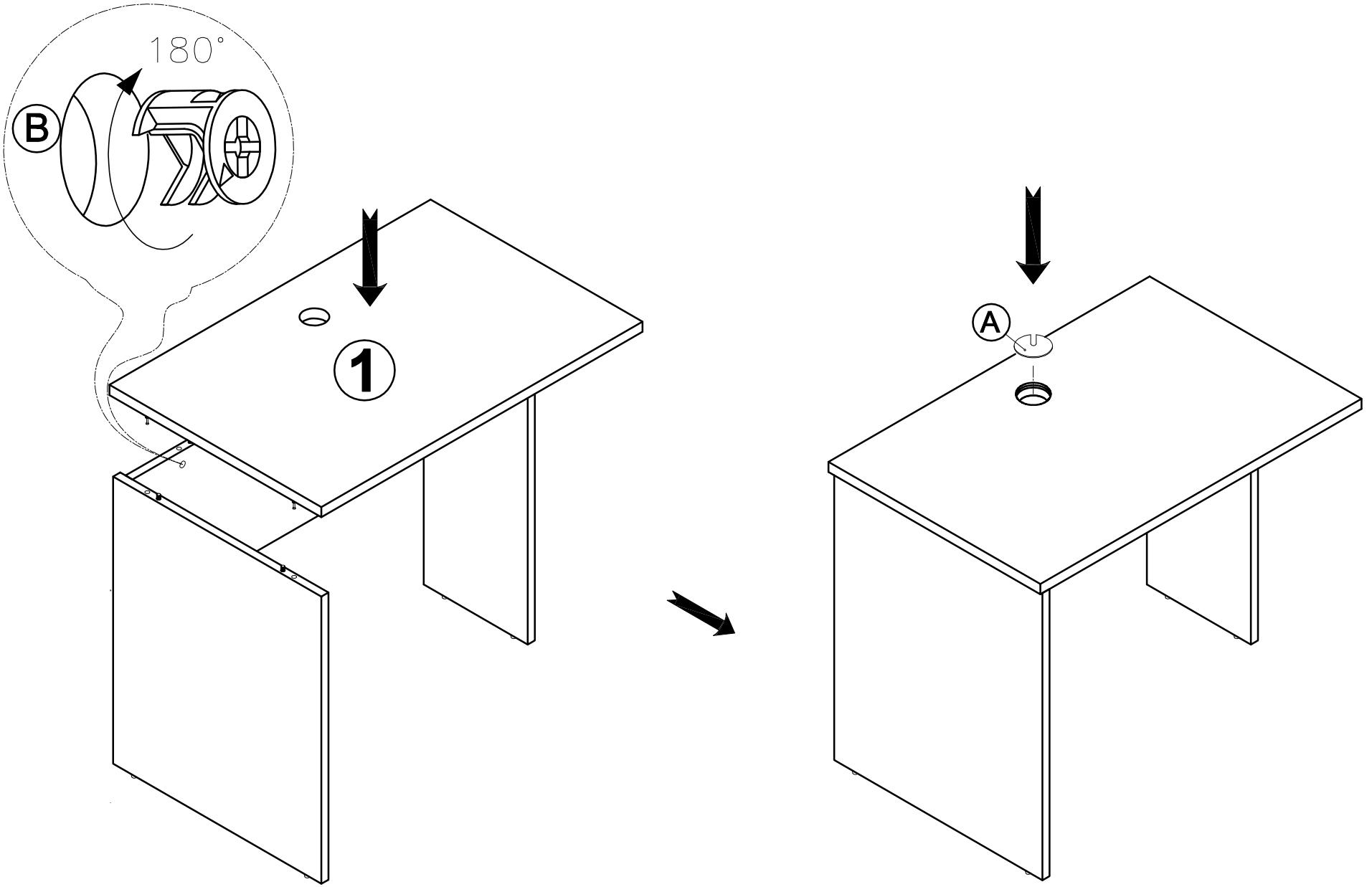

ASSEMBLY INSTRUCTION
BROOME DE-WA711L-SET

STEP 4

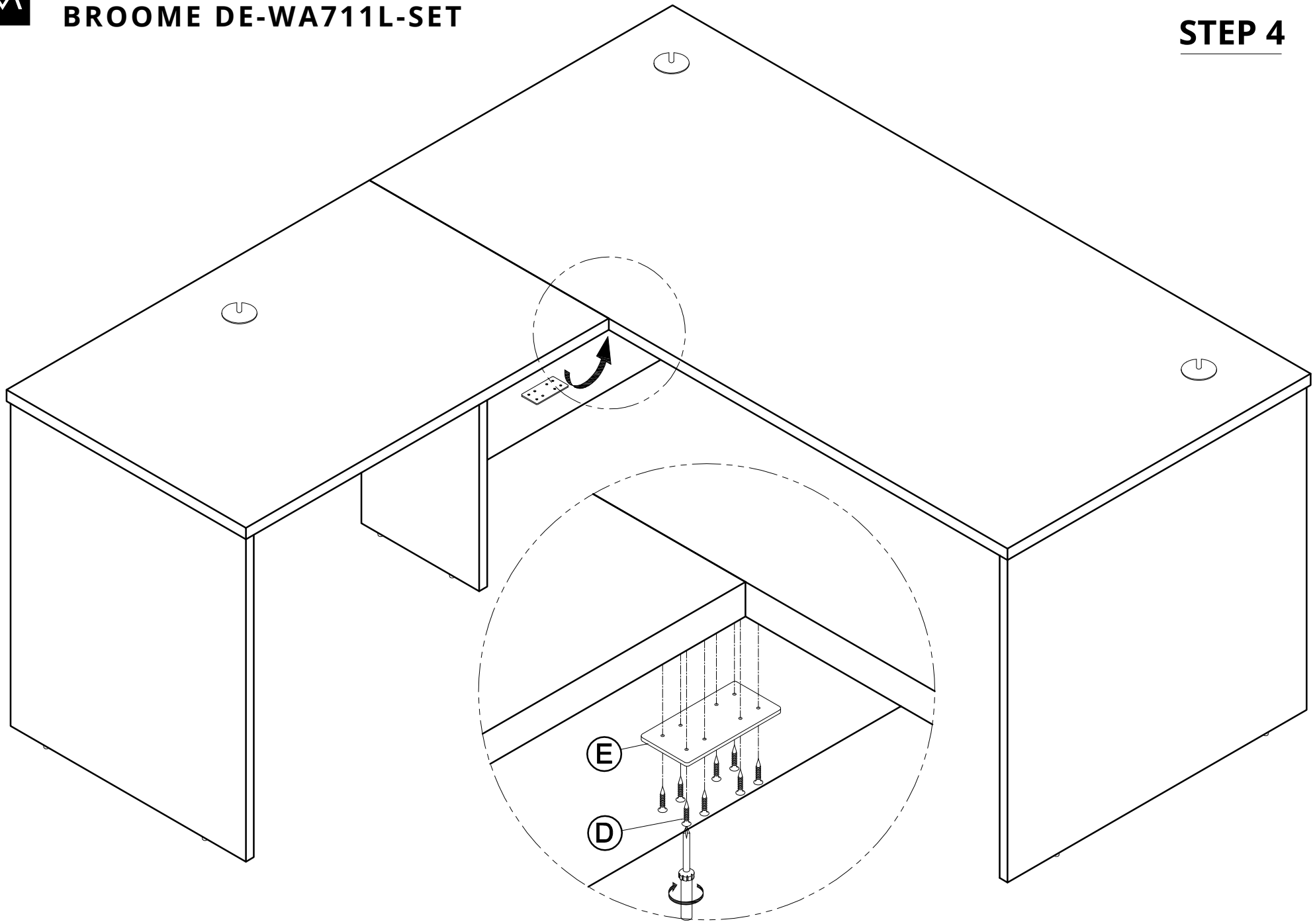

ASSEMBLY INSTRUCTION
BROOME DE-WA711L-SET

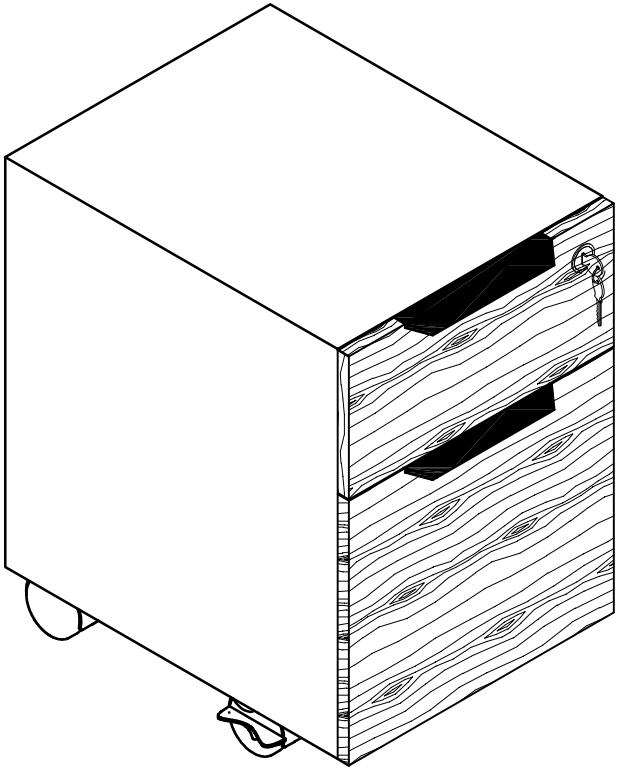

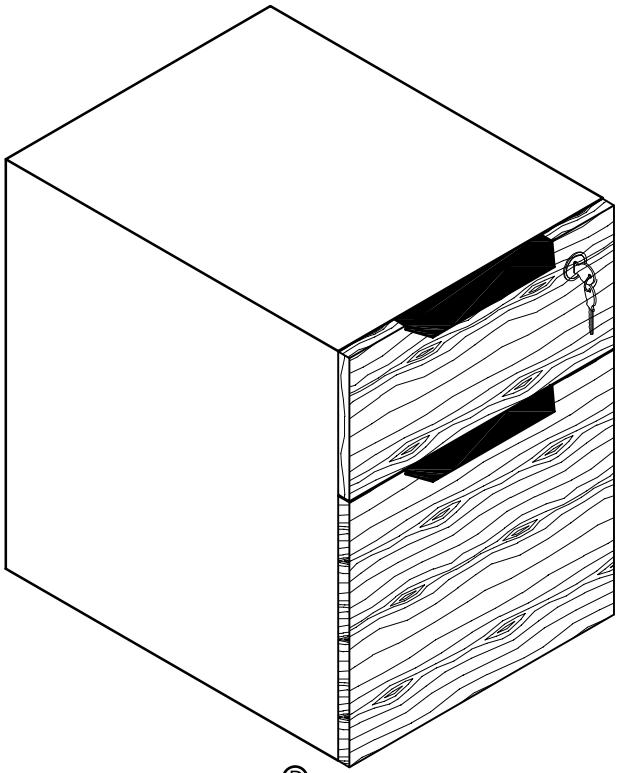

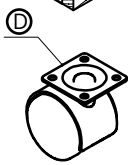

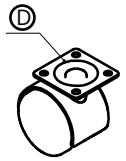

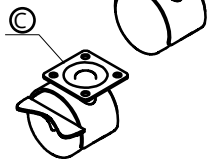

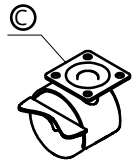

HARDWARE		TOOL
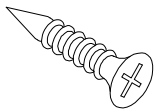	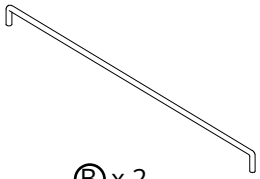	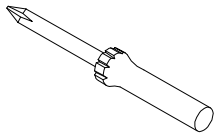
Ⓐ x 20 (M4 x 15)	Ⓑ x 2 (441 x 25 x Ø6)	

ASSEMBLY INSTRUCTION
BROOME DE-WA711L-SET

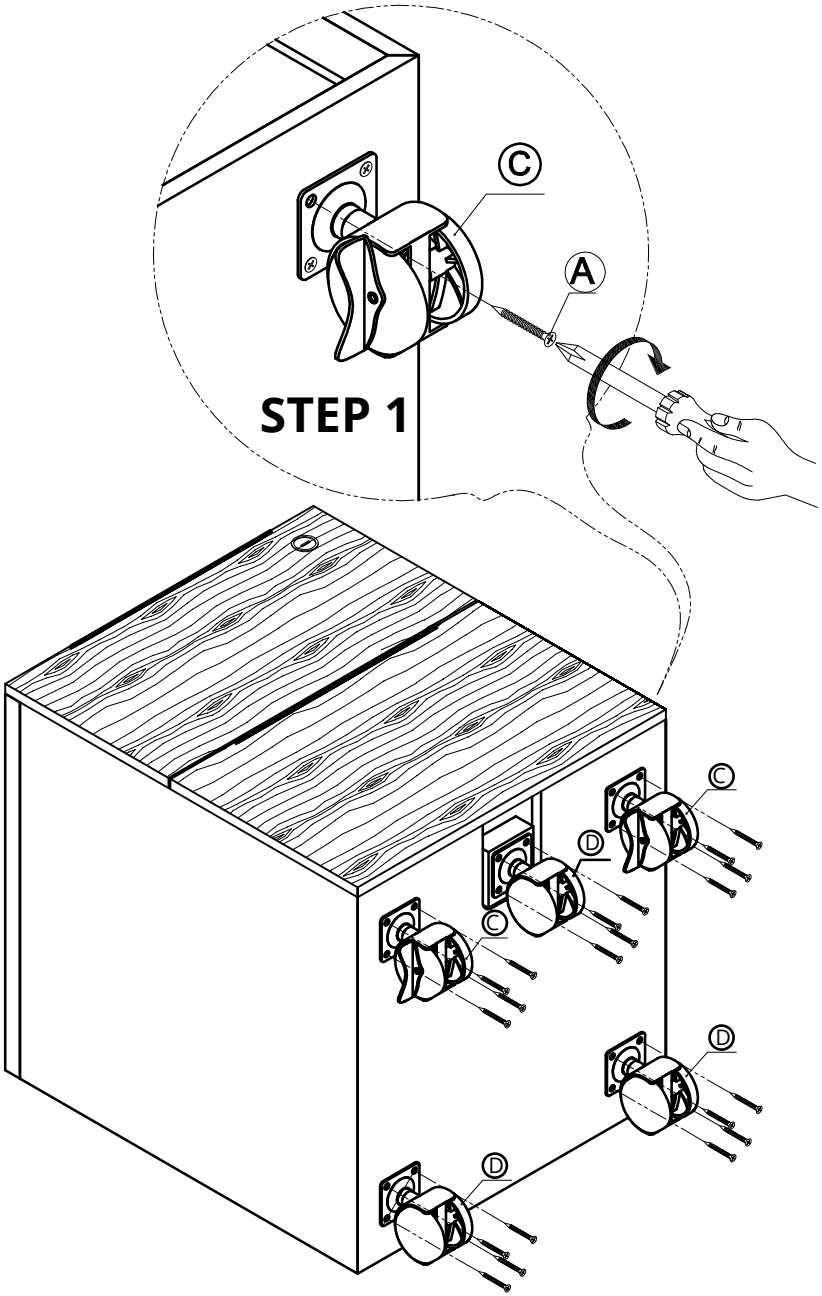

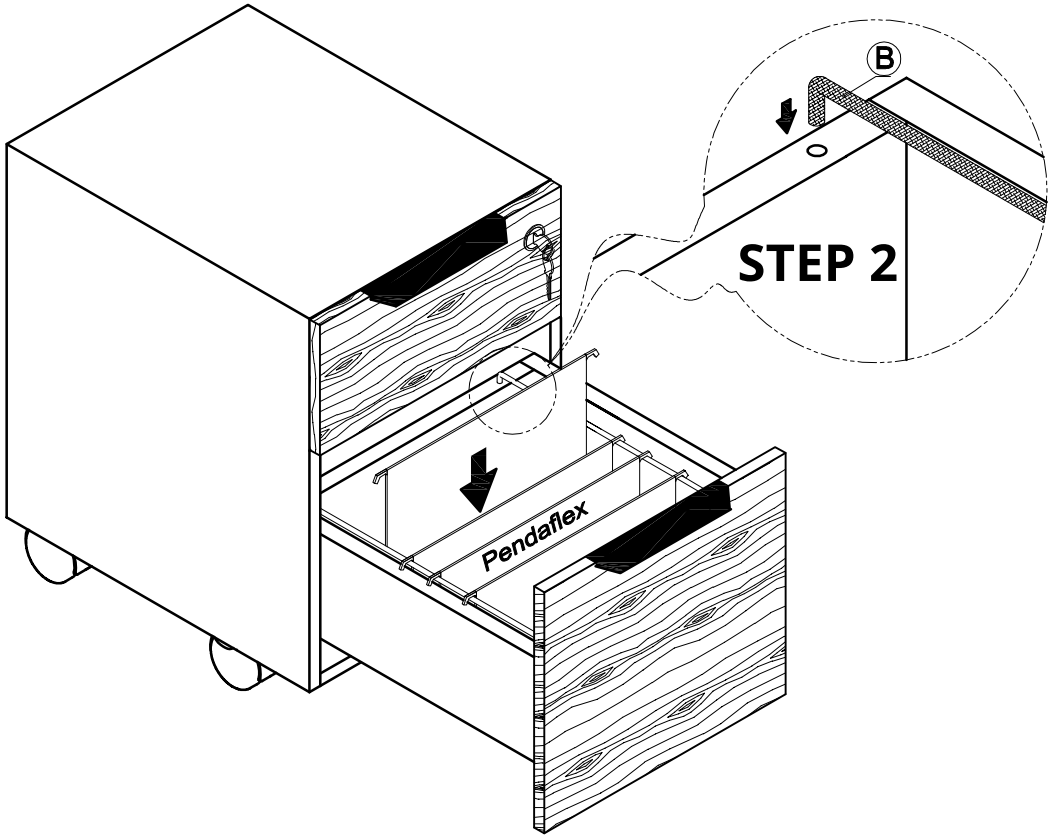

BROOME

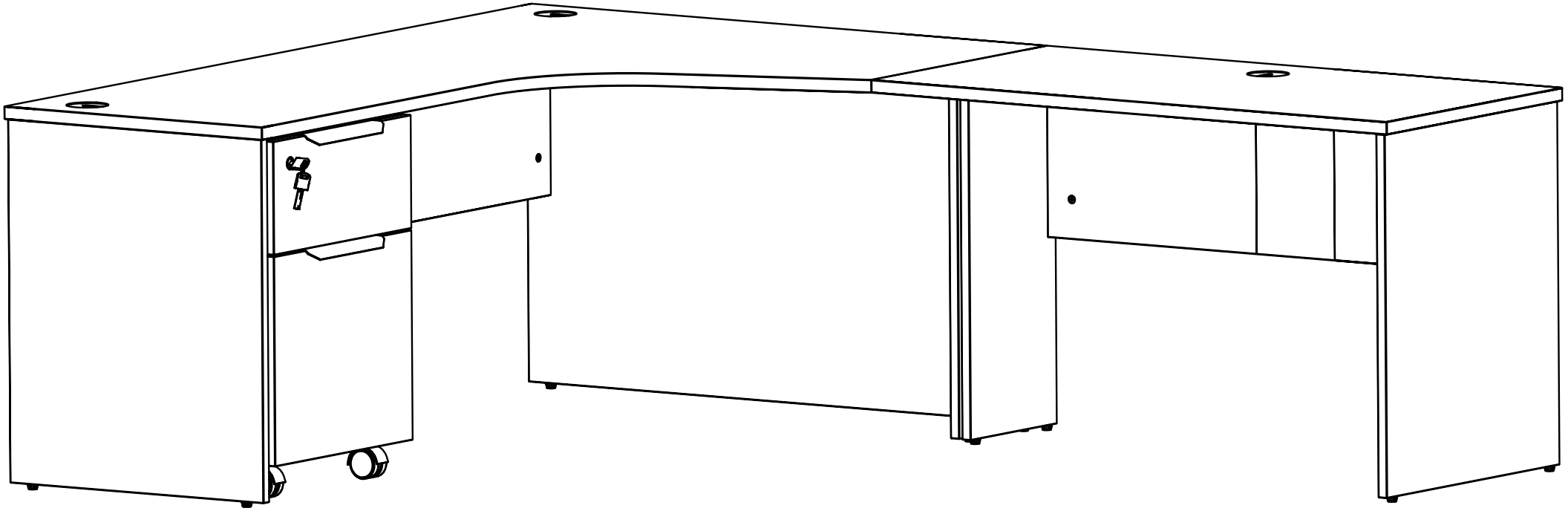

MODLOFT

ASSEMBLY INSTRUCTION
BROOME DE-WA711R-SET

PARTS

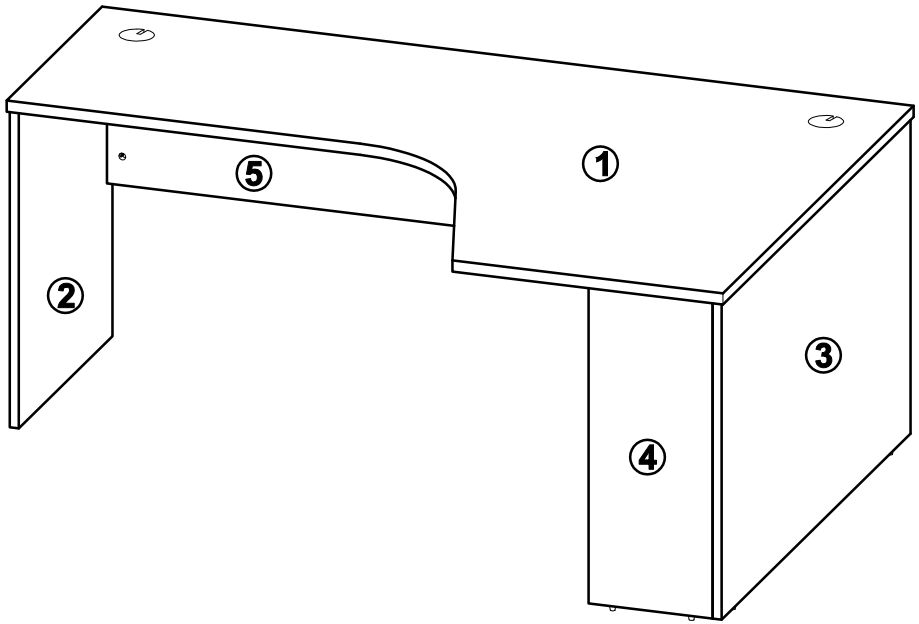

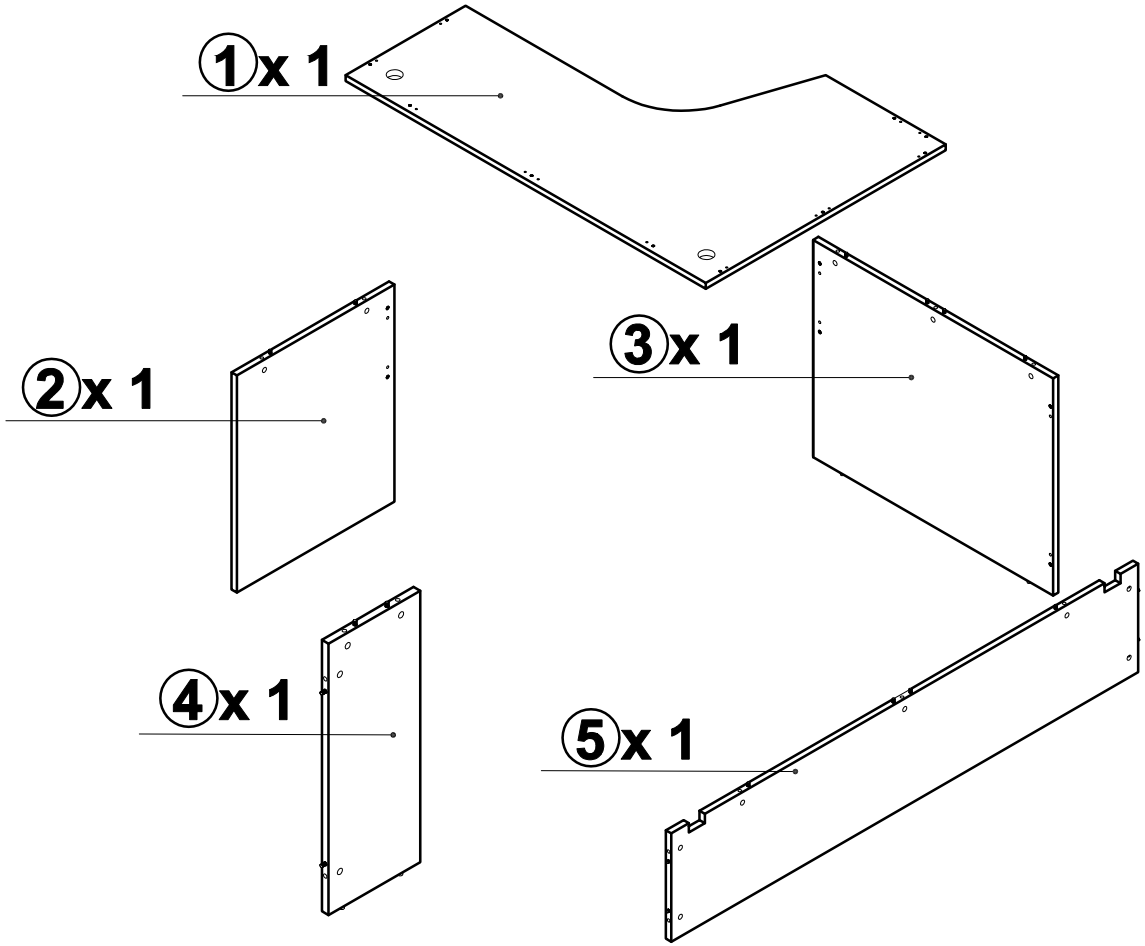

ASSEMBLY INSTRUCTION
BROOME DE-WA711R-SET

STEP 1

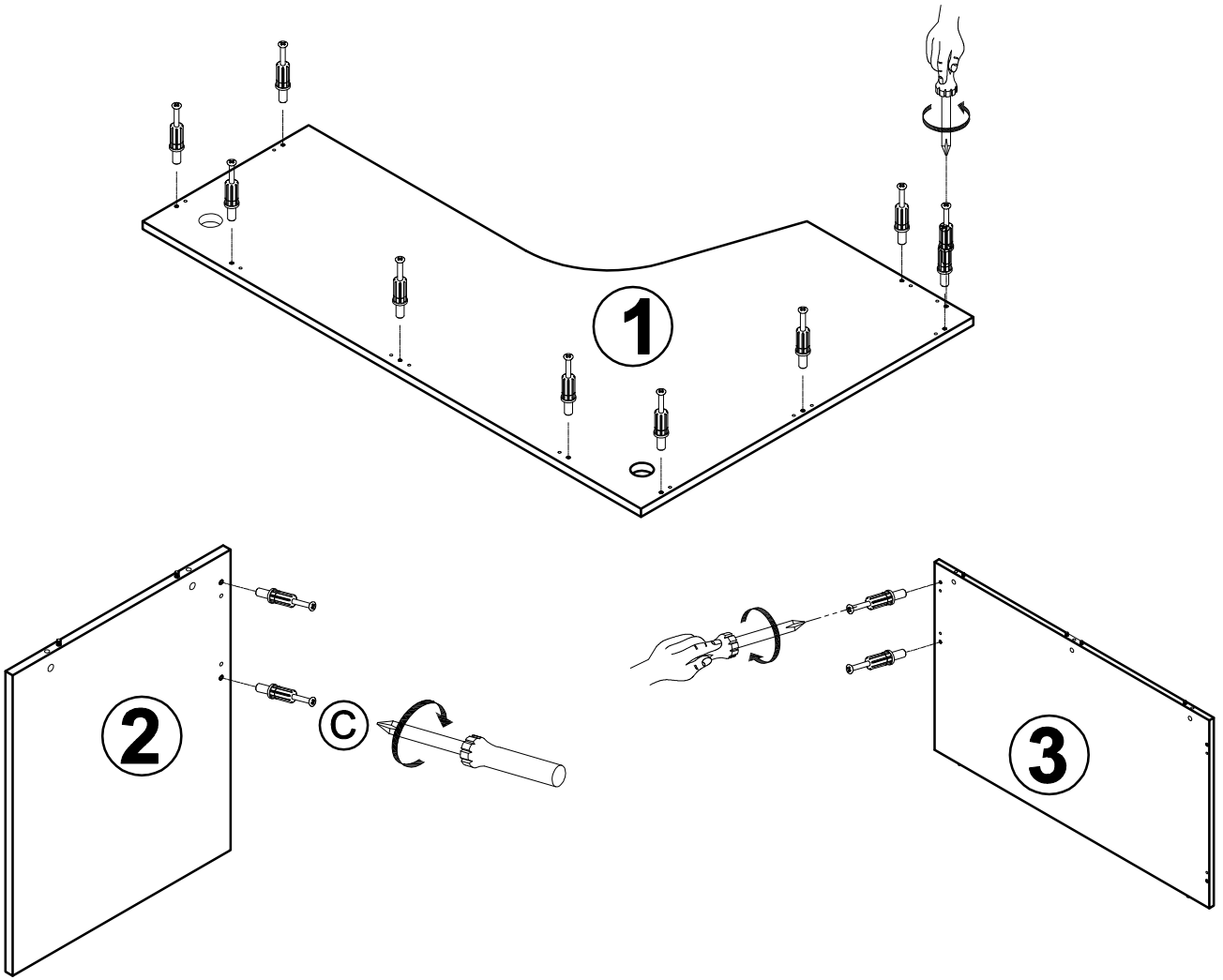

HARDWARE

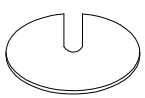

Ⓐ x 2

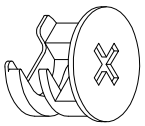

Ⓑ x 16

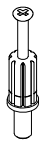

Ⓒ x 16

TOOL

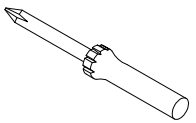

ASSEMBLY INSTRUCTION
BROOME DE-WA711R-SET

STEP 2

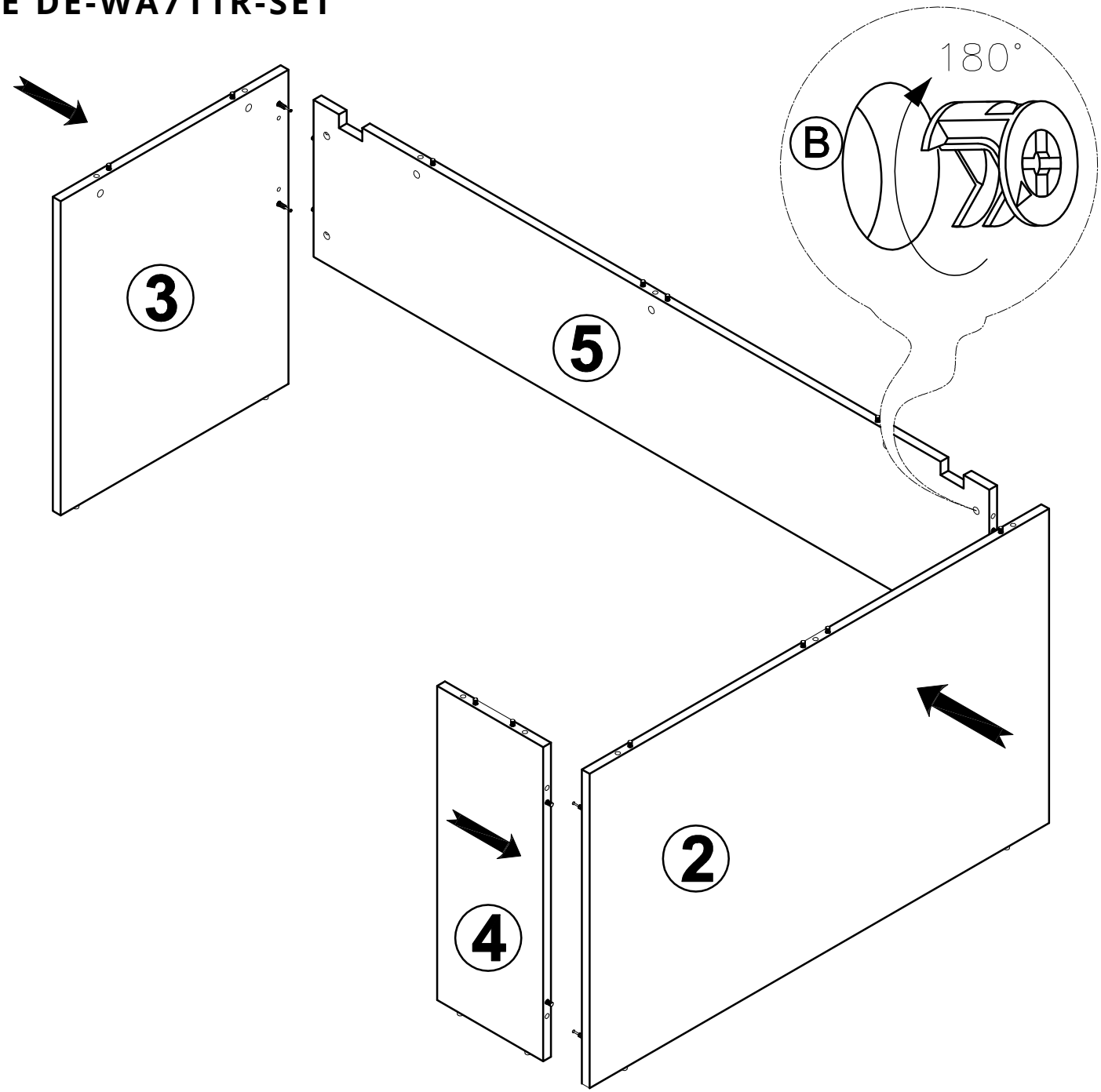

ASSEMBLY INSTRUCTION
BROOME DE-WA711R-SET

STEP 3

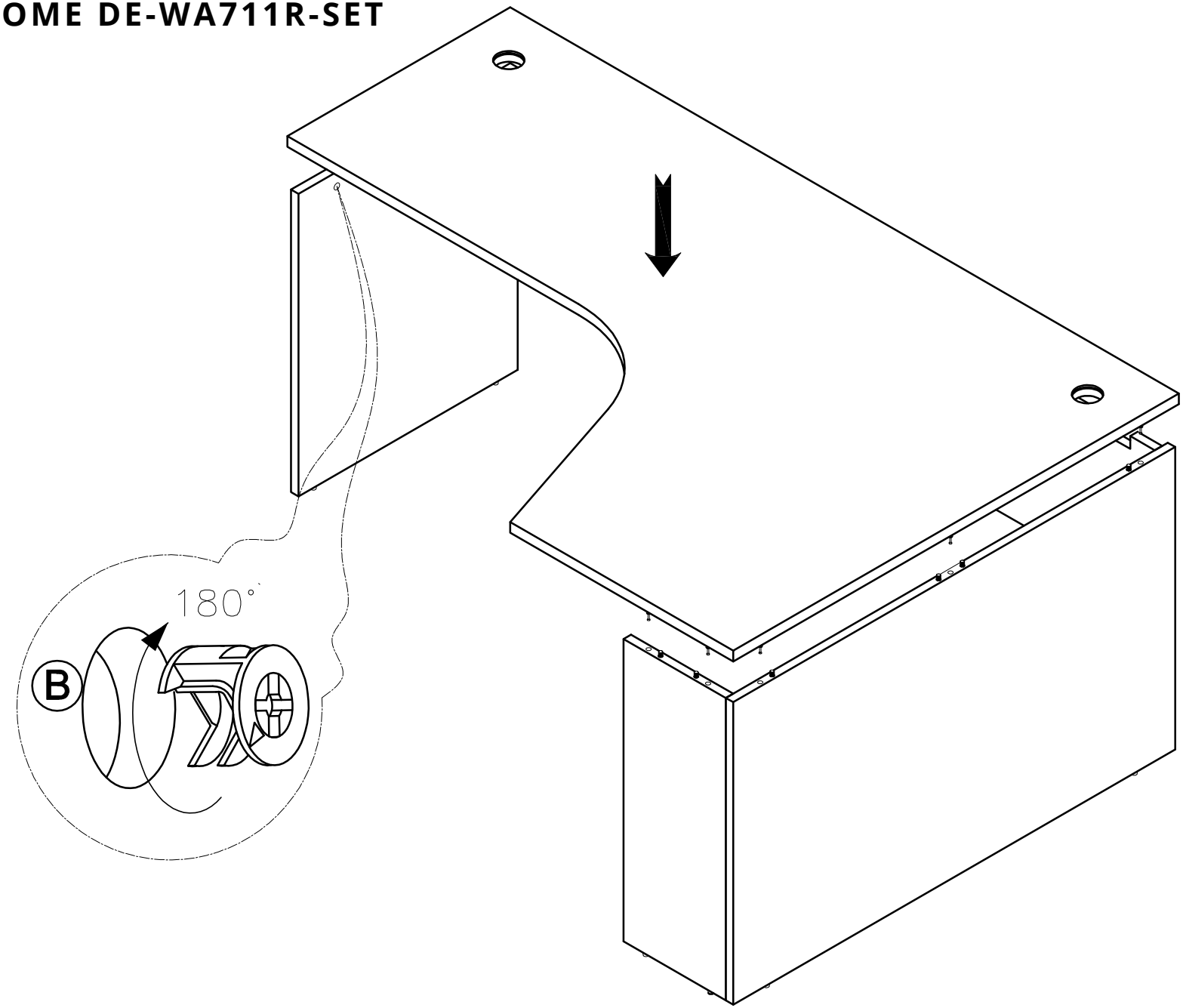

ASSEMBLY INSTRUCTION
BROOME DE-WA711R-SET

STEP 4

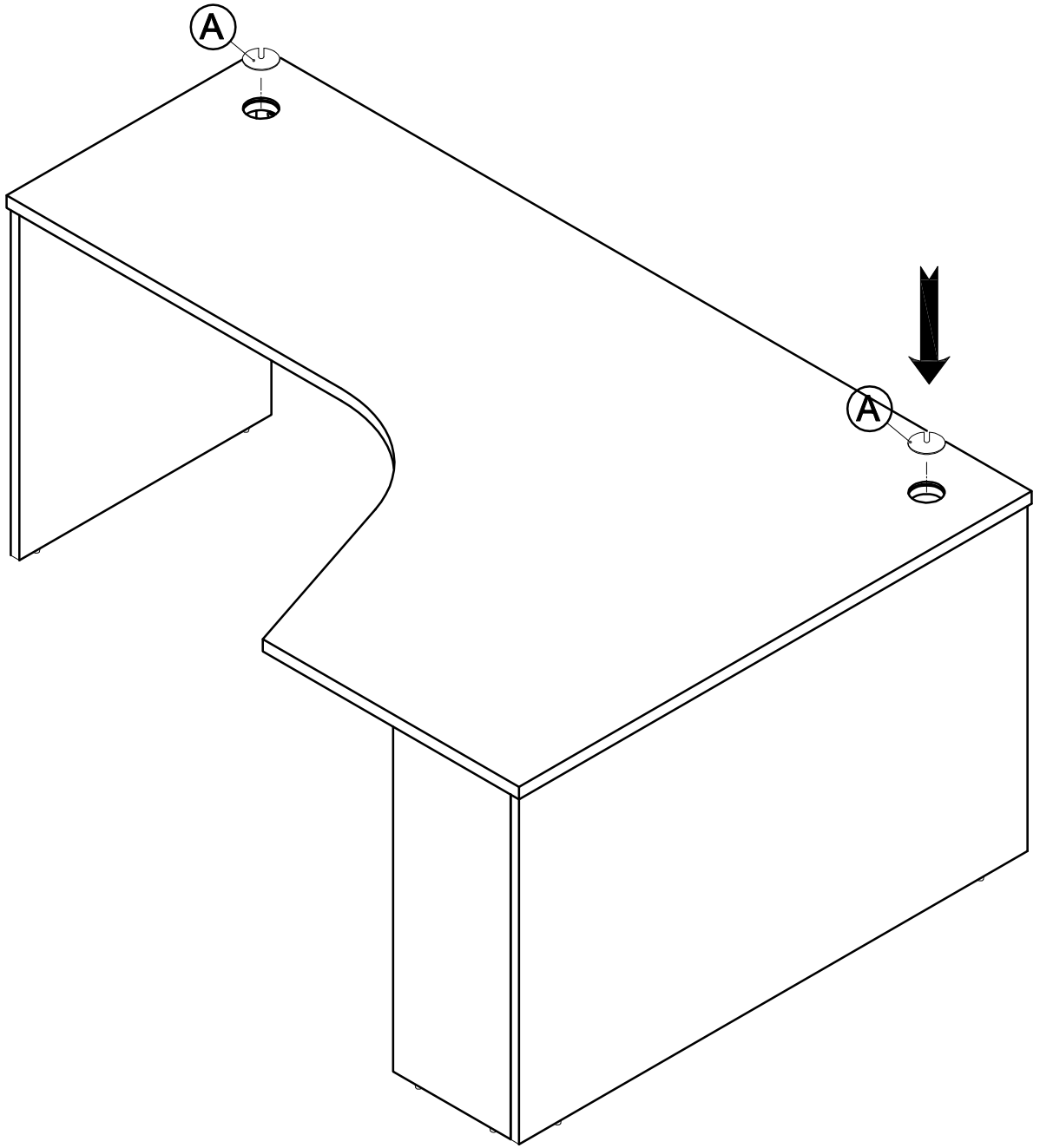

ASSEMBLY INSTRUCTION
BROOME DE-WA711R-SET

PARTS

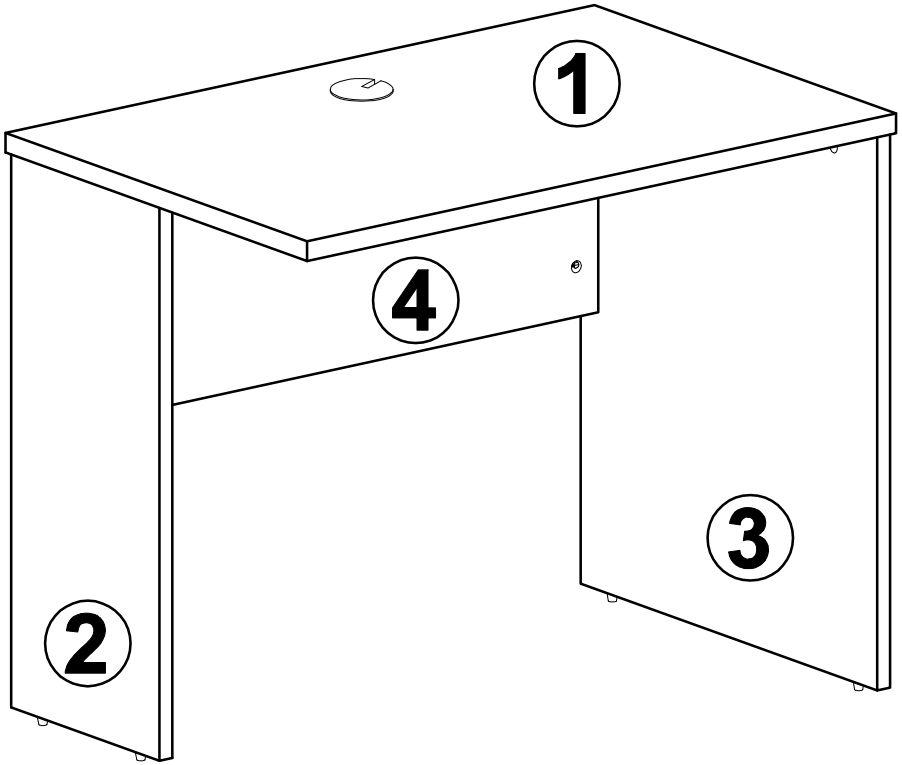

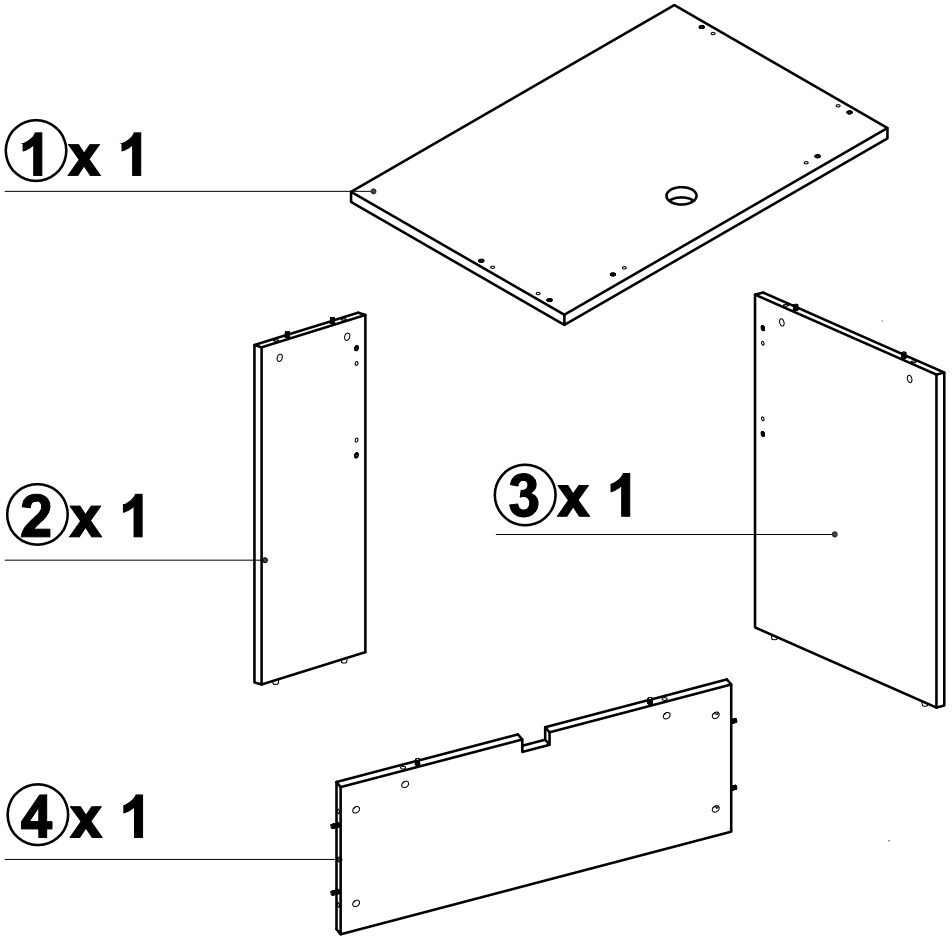

ASSEMBLY INSTRUCTION
BROOME DE-WA711R-SET

STEP 1

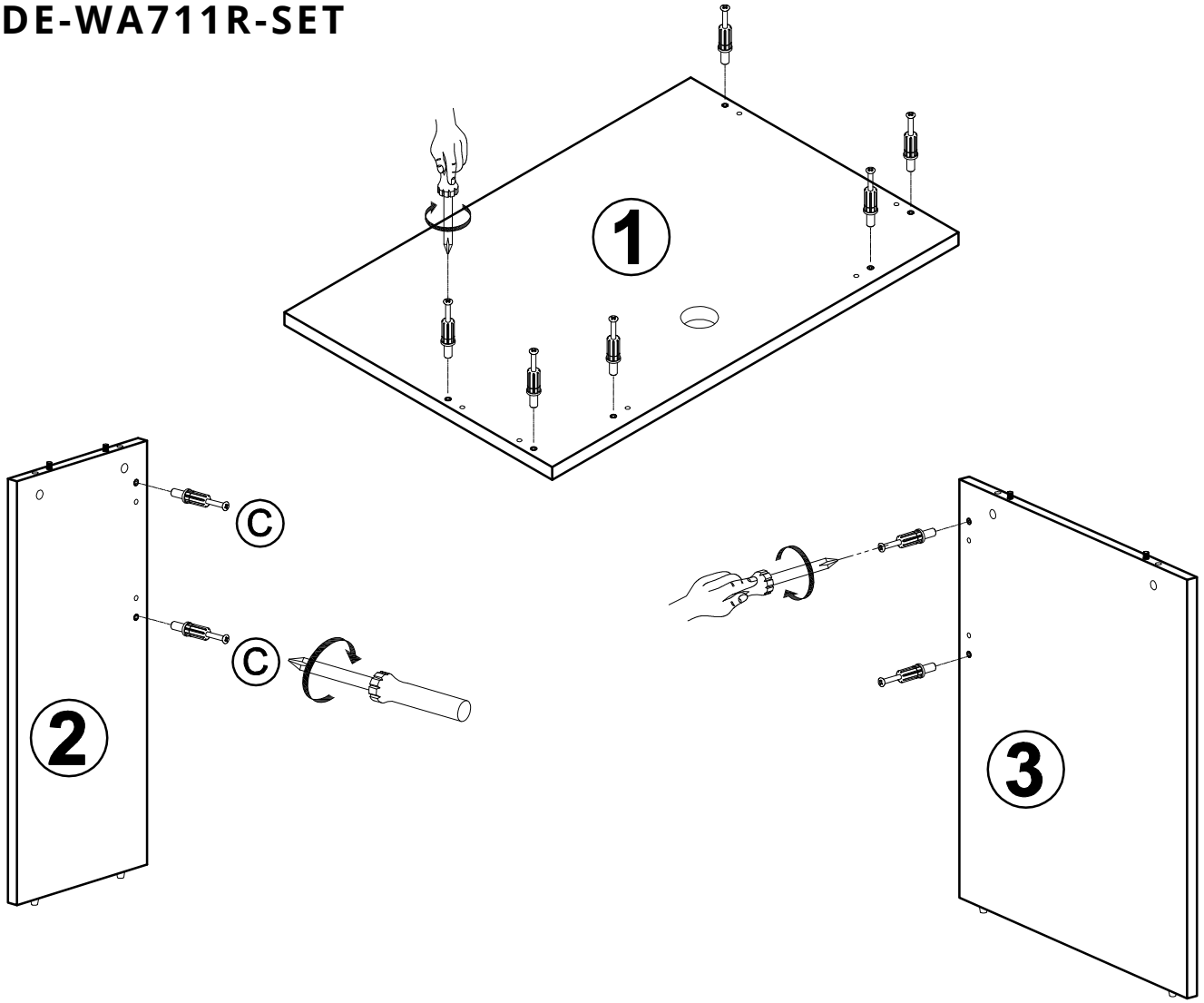

HARDWARE

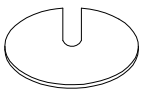

Ⓐ x 1

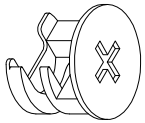

Ⓑ x 10

Ⓒ x 10

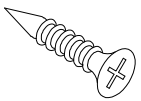

Ⓓ x 8

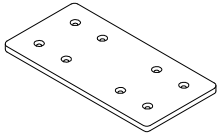

Ⓔ x 1

TOOL

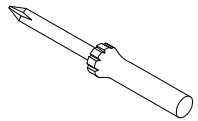

ASSEMBLY INSTRUCTION
BROOME DE-WA711R-SET

STEP 2

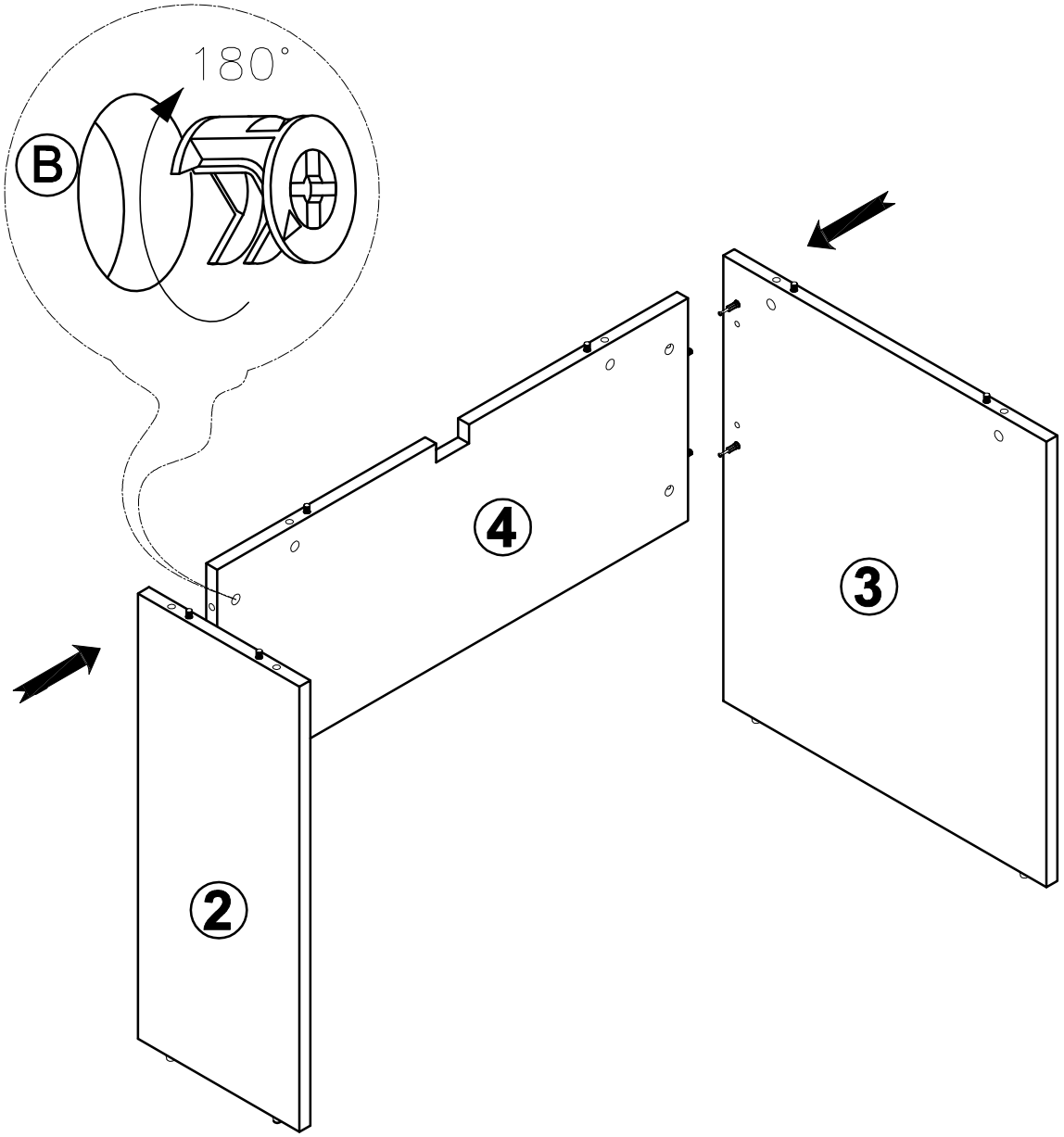

ASSEMBLY INSTRUCTION
BROOME DE-WA711R-SET

STEP 3

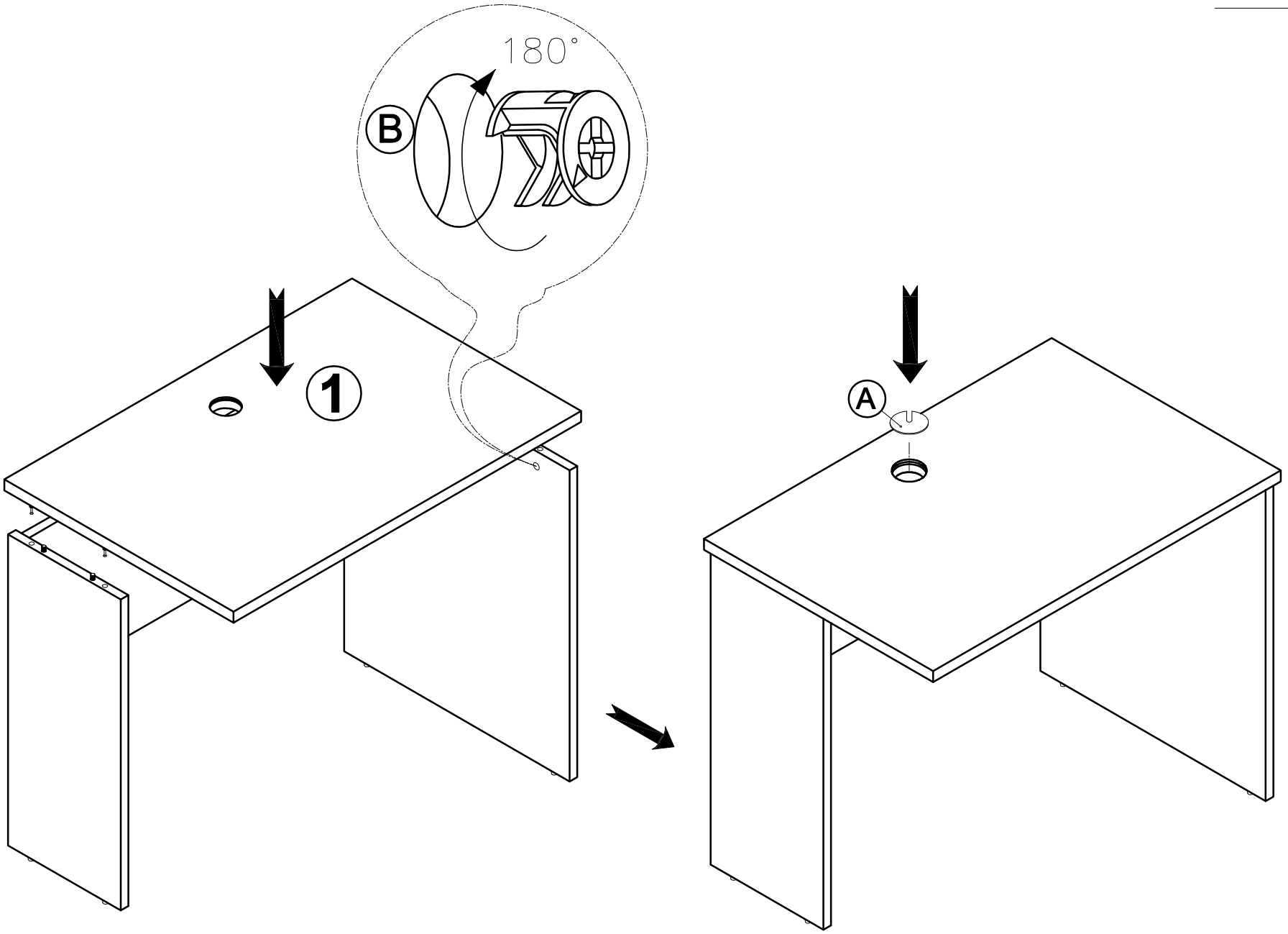

ASSEMBLY INSTRUCTION
BROOME DE-WA711R-SET

STEP 4

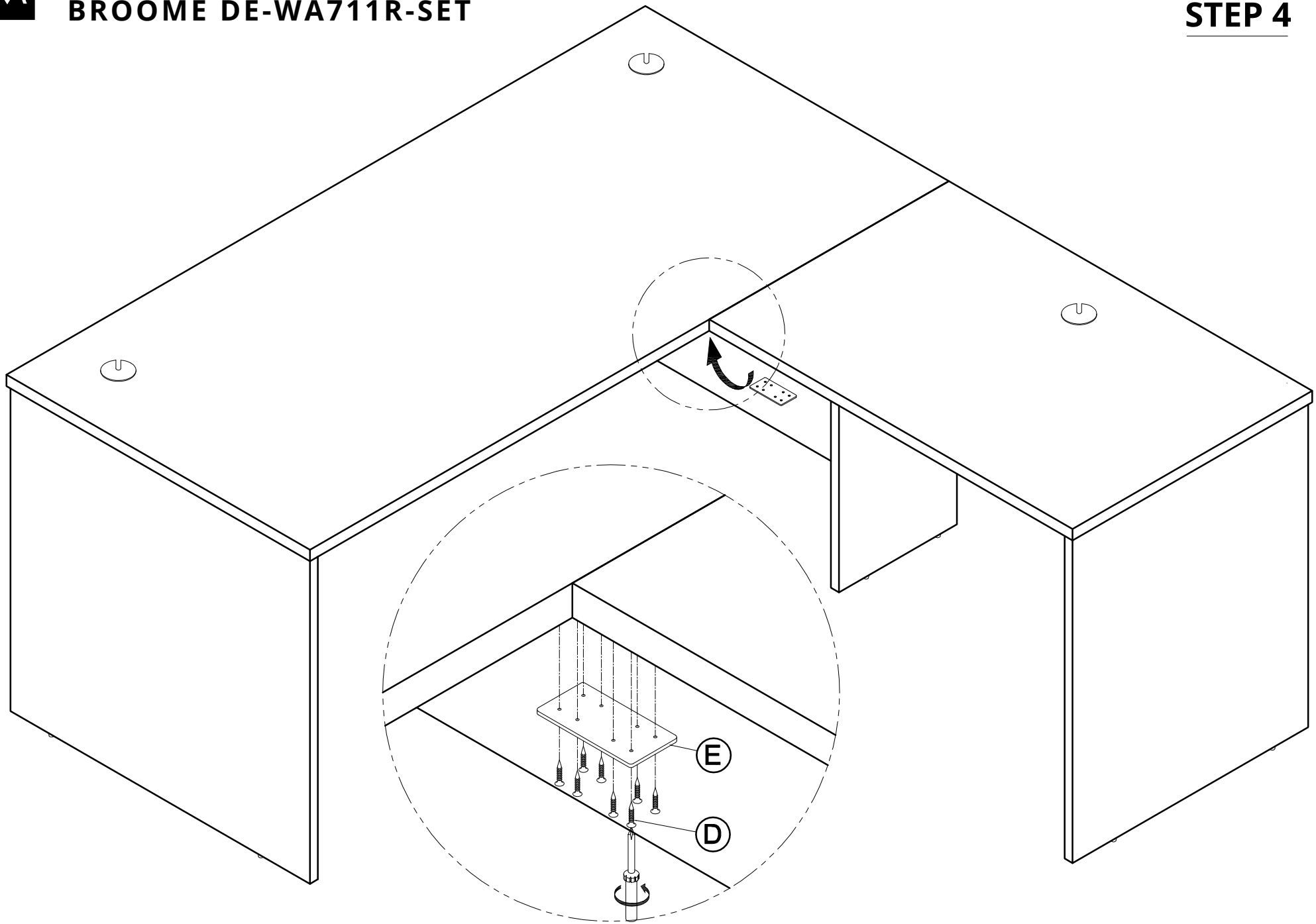

ASSEMBLY INSTRUCTION
BROOME DE-WA711R-SET

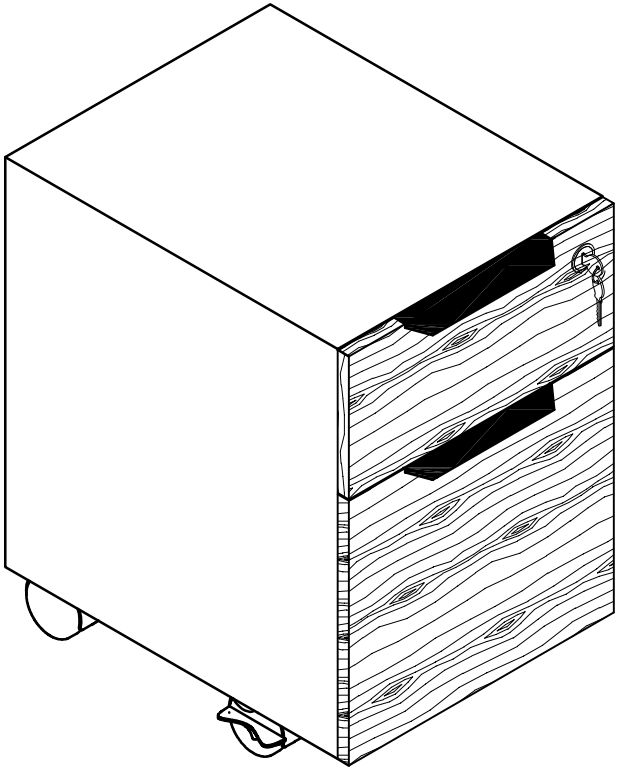

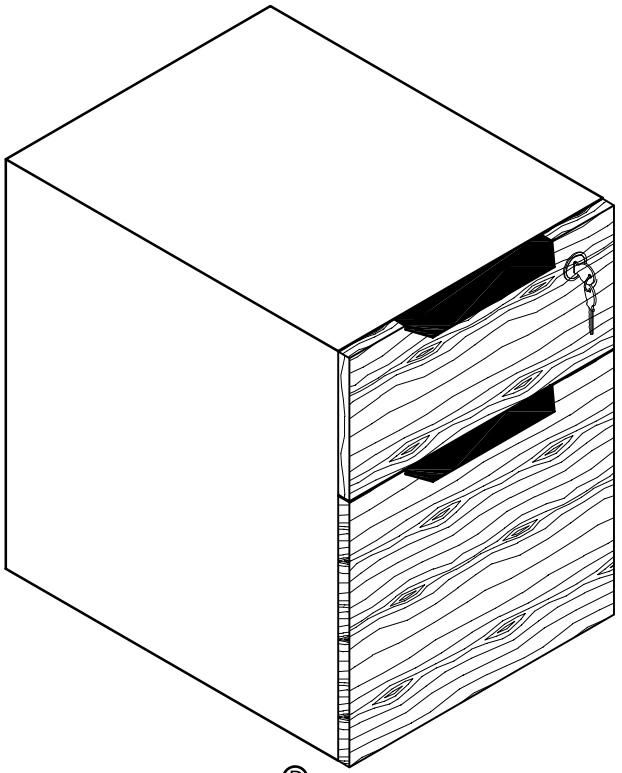

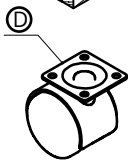

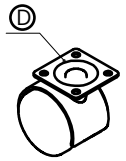

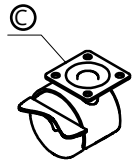

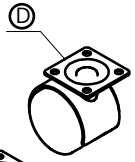

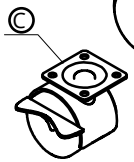

HARDWARE		TOOL
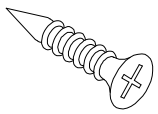	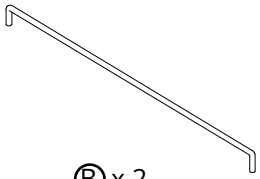	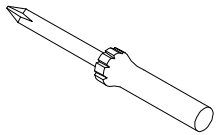
Ⓐ x 20 (M4 x 15)	Ⓑ x 2 (441 x 25 x Ø6)	
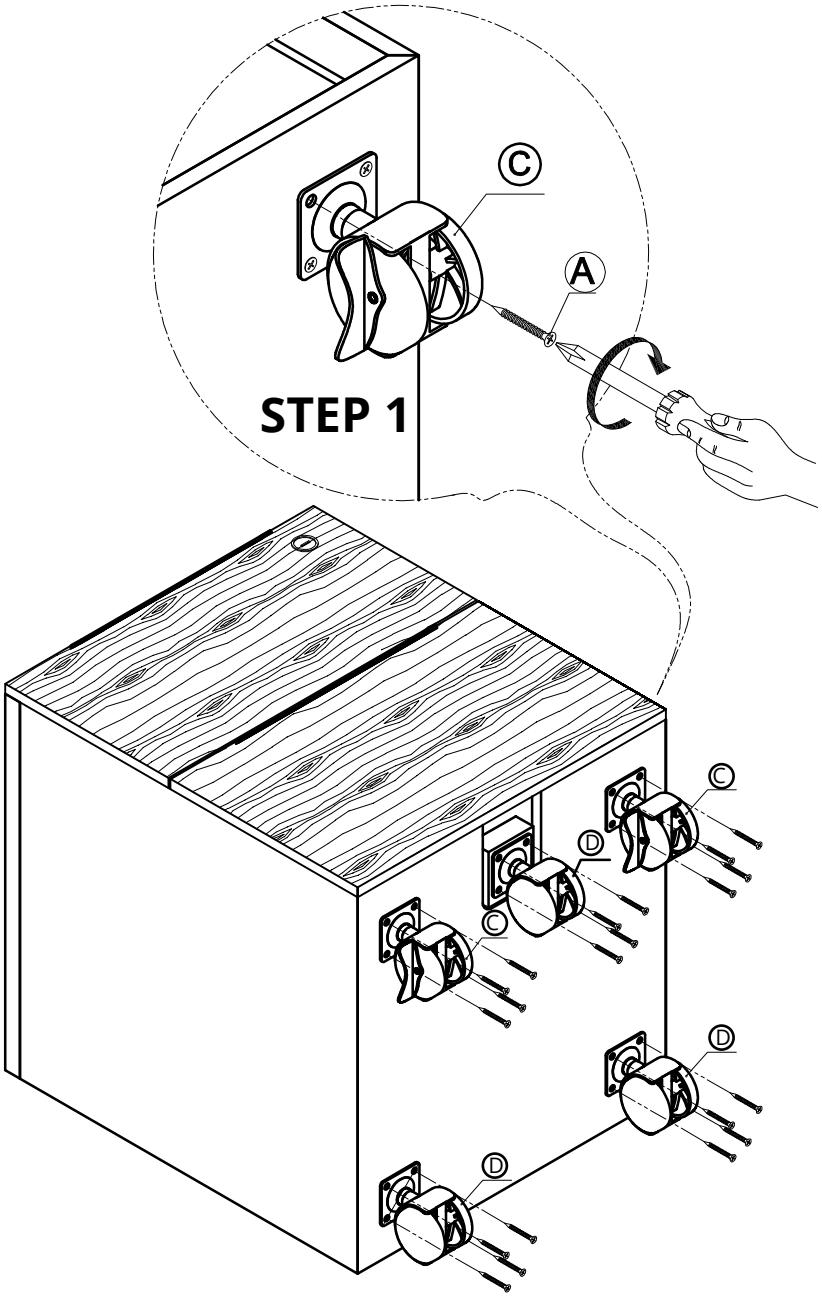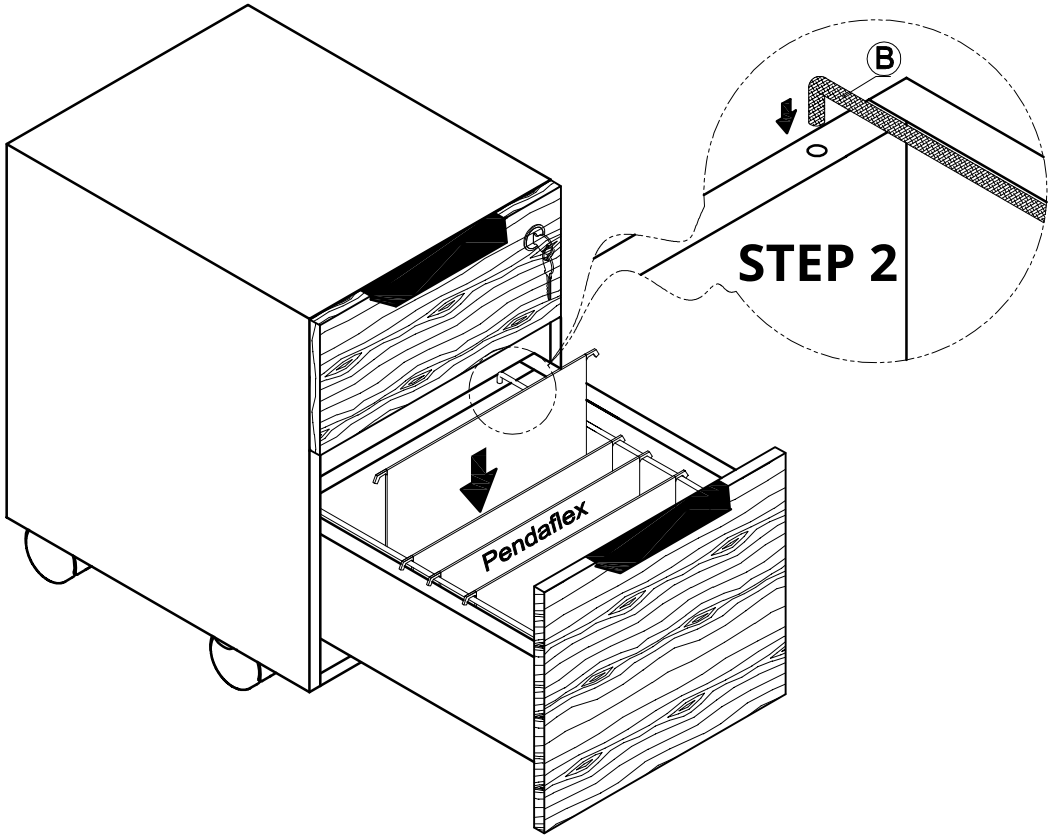
ASSEMBLY INSTRUCTION
BROOME DE-WA711R-SET